深圳市维创电子技术有限公司
Wavetronics Technologies Co., Ltd.
深圳市南山区南光路东华园 5 栋 503
Tel: +86-755-86391313 Fax: +86-755 82947279
E-mail：sales@wtt.cn Web：www.wtt.cn

Specification

Crystal Filter 70MHz

Part Number: 70M80C50

Item	Typical
Nominal Frequency (MHz)	70
Insertion Loss (dB)	3.5
Ripple within Pass Band (dB)	1.0
Pass Band at -3dB (kHz)	80
Bandwidth at 60dB Attenuation (kHz)	200
Group Delay Variance ±25kHz (us)	5
Ultimate Attenuation (dB)	65
Input/ Output Impedance (Ω)	50
Operation Temperature (℃)	-40 ~ +70
Storage Temperature (℃)	-45 ~ +85
Package Size (mm)	30x20x9

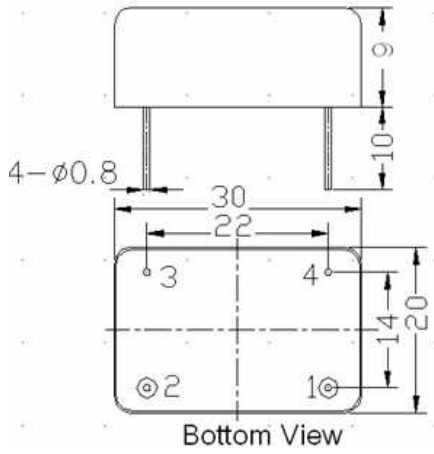

Pin No.	Description
1	Input/Output
2	Output/Input
3,4	Ground